| LONG SEAMS | |
|---|---|
| COURSE | ORIENTATION |
| 1 (TOP) | 45° |
| 2 | 51° |

*VERT – TOP TO BOTTOM

Ship loose items: △1
(4) SHIM PLATE

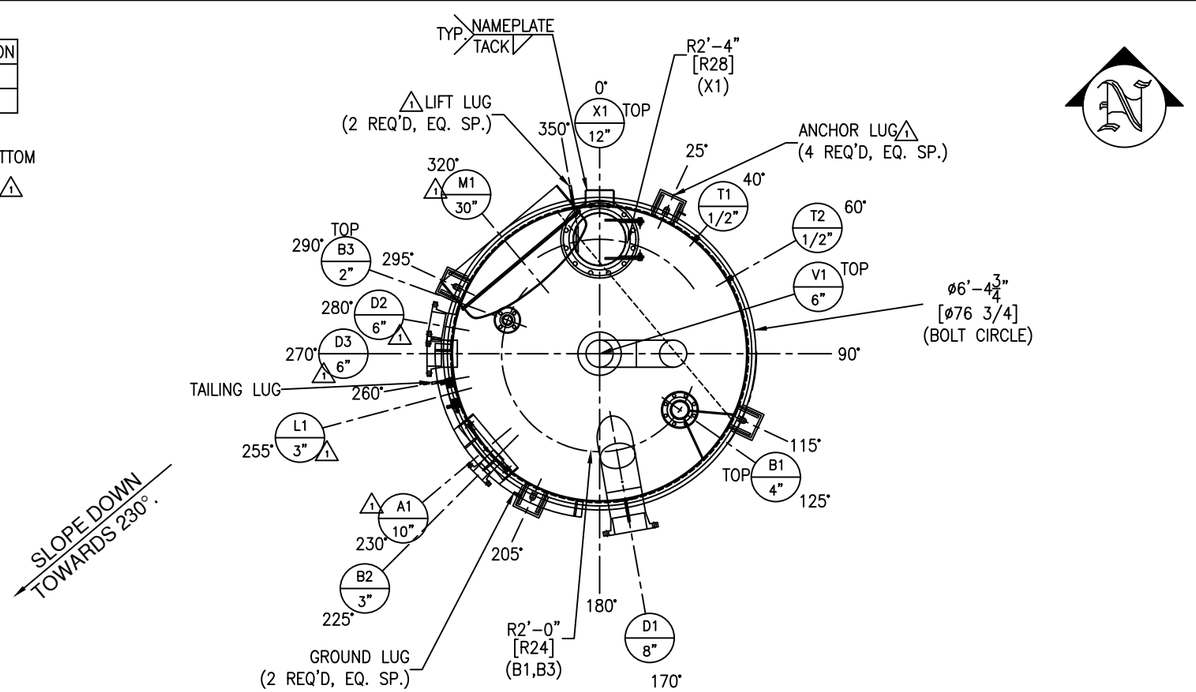


NOTE 7: SPOT X-RAY AS PER API 650 FOR M1 & M1 REPAD.

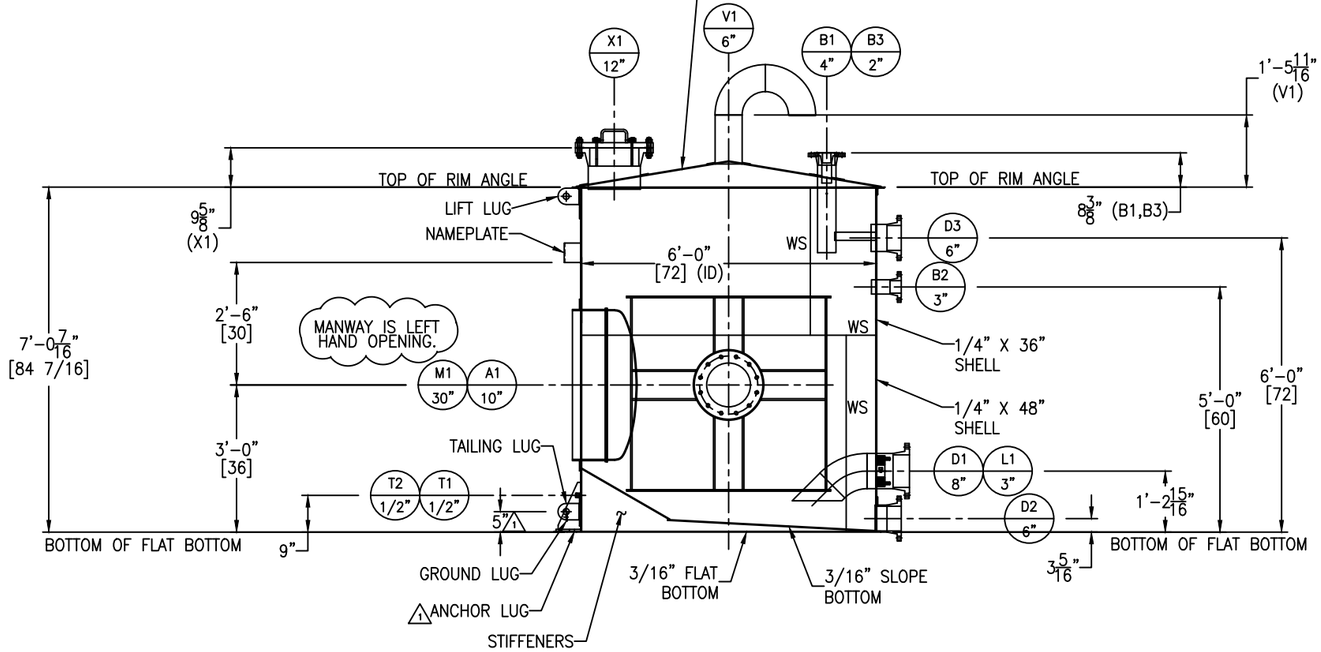


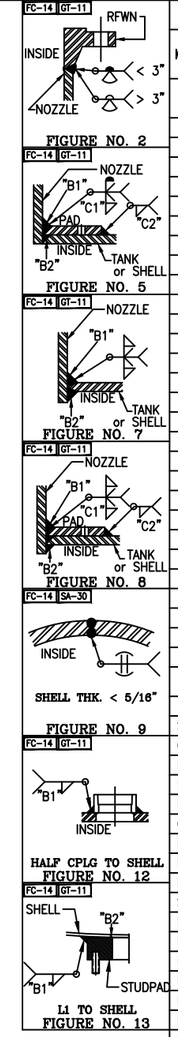


## NOZZLE SCHEDULE

| MARK | SERVICE | SIZE | RATING | TYPE / STYLE | NECK SCHED. | PROJECTION EXT. (℄) | PROJECTION INT. (MIN.) | WELD FIGURE | REPAD SIZE (WIDTH X THK.) | WELD SIZE "A1" | "A2" | "B1" | "B2" | "C1" | "C2" |
|---|---|---|---|---|---|---|---|---|---|---|---|---|---|---|---|
| A1 | AGITATOR (BY OTHERS) | 10" | – | PAD FLANGE W/ WALL RING(BY OTHERS) | – | SEE DWG | SEE DWG | SEE DWG | – | – | – | 1/4 | 1/4 | – | – |
| B1 | PROCESS INLET | 4" | 150# | RFWN | 40S | SEE DWG | SEE DWG | 2,8 | 2" X 3/16" | – | – | 1/4 | 1/8 | 3/16 | 3/16 |
| B2 | PROCESS INLET | 3" | 150# | RFWN | 40S | 6" | 1" | 2,7 | – | – | – | 1/4 | 1/4 | – | – |
| B3 | WATER SPRAY | 2" | 150# | RFWN | 40S | SEE DWG | 1" | 2,8 | 2" X 3/16" | – | – | 1/4 | 1/8 | 3/16 | 3/16 |
| D1 | PROCESS OUTLET | 8" | 150# | RFWN | 40S | 8" | SEE DWG | 2,7 | – | – | – | 1/4 | 1/4 | – | – |
| D2 | DRAIN | 6" | 150# | RFWN | 40S | 6" | – | 2,5 | 2" X 1/4" SEE DWG | – | – | 1/4 | 1/8 | 1/4 | 1/4 |
| D3 | OVERFLOW | 6" | 150# | RFWN | 40S | 6" | 1" | 2,7 | – | – | – | 1/4 | 1/4 | – | – |
| L1 | LEVEL | 3" | – | SP. STUDPAD | – | – | – | 13 | – | – | – | 1/4 | 1/4 | – | – |
| M1 | MANWAY | 30" | – | CM-2 | 1/4" | 2" | SEE DWG | 8 | 2 1/2" X 1/4" | – | – | 1/4 | 1/4 | 1/4 | 1/4 |
| V1 | VENT | 6" | – | PIPE W/ ELBOWS | 40S | SEE DWG | – | 5 | 2" X 3/16" | – | – | 1/4 | 1/8 | 3/16 | 3/16 |
| X1 | INSPECTION HATCH | 12" | 150# | RFWN W/ BLIND | 40S | SEE DWG | 1" | 2,8 | 2 1/2" X 1/4 | – | – | 1/4 | 1/8 | 1/4 | 3/16 |
| T1 | TEST COUPLING | 1/2" | 3000# | HALF THRD CPLG W/ PLUG | – | – | – | 12 | – | – | – | 1/4 | 1/8 | – | – |
| T2 | TEST COUPLING | 1/2" | 3000# | HALF THRD CPLG W/ PLUG | – | – | – | 12 | – | – | – | 1/4 | 1/8 | – | – |

## MATERIALS OF CONSTRUCTION

| | VESSEL |
|---|---|
| SHELL | SA240-316/316L |
| CONE TOP/FLAT&SLOPE BTM | SA240-316/316L |
| RIM ANGLE | SA479-316/316L |
| NOZZLE NECKS | SA312-316/316L WLD & SA403-316/316L WPB |
| NOZZLE FLANGES | SA182F-316/316L |
| COUPLING/PLUG | SA182F-316/316L |
| MANWAY NECKS | SS316 |
| MANWAY FLANGES | SS316 |
| MANWAY GASKETS | BUNA-N |
| STUD PAD | SA240-316/316L OR SA182F-316/316L |
| NOZZLE STIFFENERS | SA240-316/316L |
| NOZZLE GASKETS | GARLOCK 3000 |
| BOLTS/STUDS (NOZZLE) | SA193-B8 (TEFLON COATED) |
| NUTS (NOZZLE) | SA194-8 (TEFLON COATED) |
| BOLTS/STUDS (STRUCTURE) | – |
| NUTS (STRUCTURE) | – |
| REPADS | SA240-304/304L |
| SUPPORTS/HOLD DOWNS | SA240-304/304L |
| LIFTING/TAILING LUGS | SA240-304/304L |
| GROUND LUG | SA240-304/304L |
| BOTTOM STIFFENERS | SA240-304/304L |
| AGITATOR ASSEMBLY | SS316 |
| AGITATOR STIFFENERS | SA240-304/304L |
| PLATFORM CLIPS | – |
| DIPTUBE SUPPORT | – |
| JACKET SHELL | – |
| JACKET HEADS | – |
| JACKET NOZZLE NECKS | – |
| JACKET NOZZLE FLANGES | – |

## DESIGN DATA

| | VESSEL |
|---|---|
| DESIGN AND FAB. CODE | API650 |
| CERT. STAMP REQ'D. | NO |
| DESIGN PRESSURE | ATM |
| DESIGN TEMPERATURE | 194° F |
| MIN. DESIGN METAL TEMP. | -20° F @ ATM |
| OPERATING PRESSURE | ATM |
| OPERATING TEMPERATURE | 115° F |
| JOINT EFFICIENCY HEADS | 0.70 |
| JOINT EFFICIENCY SHELL | 0.70 |
| CORROSION ALLOWANCE | 0" |
| SPECIFIC GRAVITY | 1.0 |
| EARTHQUAKE ZONE | Ss = (0.526) S1 = (0.23) |
| WIND LOAD | 99 MPH |
| STRESS RELIEF | NOT REQ'D |
| RADIOGRAPHIC EXAM | SEE NOTE 7 |
| DYE PENETRANT EXAM | NOT REQ'D |
| MAGNETIC PARTICLE EXAM | NOT REQ'D |
| HYDROSTATIC TEST | – |
| PNEUMATIC TEST | 2 PSIG / GAUGE#1 |
| JKT DESIGN AND FAB. CODE | – |
| JKT CERT. STAMP REQ'D. | – |
| JKT DESIGN PRESSURE | – |
| JKT DESIGN TEMPERATURE | – |
| JKT MIN. DESIGN METAL TEMP. | – |
| JKT OPERATING PRESSURE | – |
| JKT OPERATING TEMPERATURE | – |
| JKT JOINT EFFICIENCY HEADS | – |
| JKT JOINT EFFICIENCY SHELL | – |
| JKT HYDRO TEST | – |

## VESSEL FINISH

| | |
|---|---|
| INTERIOR WELD TREATMENT: | SAV TANK STANDARD |
| EXTERIOR WELD TREATMENT: | SAV TANK STANDARD |
| SAV TANK FINISHING STANDARD: | SEE NOTE 6 |
| INSULATION: | N/A |
| PAINTING: | N/A |

## VESSEL CAPACITY AND WEIGHTS

| | |
|---|---|
| OPERATING CAPACITY | 1,050 GAL. |
| FULL CAPACITY | 1,400 GAL. |
| EMPTY SHIPPING WEIGHT | 4,200 LBS. |
| WEIGHT FULL OF WATER | 16,300 LBS. |
| WEIGHT FULL OF PRODUCT | 16,300 LBS. |

## QUALITY CONTROL

ENG. _____ DATE: _____

Q.C. _____ DATE: _____

This drawing is issued for customer approval. please review, make approval changes (if any) in red. check the appropriate box, sign & date.

- ☐ Approval – no changes. Please proceed with fabrication.
- ☐ Approved as noted. Please proceed with fabrication
- ☐ Not approved. Please make changes and resubmit.

Customer signature _____ Date _____

## GENERAL NOTES

1.) COVER ALL FLANGES, OPENINGS & MACHINED SURFACES PRIOR TO SHIPMENT UNLESS OTHERWISE NOTED.
2.) BOLT HOLES TO STRADDLE 0° & 180° UNLESS OTHERWISE NOTED.
3.) NOZZLE REPADS TO HAVE (1) ø1/4" TELL-TALE HOLES ON HORIZONTAL CENTER LINE.
ALL OTHER REPADS TO HAVE (1) ø1/4" WEEP HOLE AT LOWEST POINT ON PAD.
4.) MANUFACTURING TOLERANCE TO BE IN ACCORDANCE WITH API STANDARD 650 7.5.
5.) ASME MATERIALS TO CONFORM TO THE FOLLOWING: FLANGES – B16.5, FITTINGS – B16.9 & COUPLINGS – B16.11.
6.) PICKLE ALL EXTERIOR WELDS. PASSIVATE INTERIOR & EXTERIOR OF VESSEL.
7.) X-RAY: SPOT X-RAY AS PER API 650 FOR M1 & M1 REPAD.

## △1 REVISIONS

| REV | D.BY | C.BY | DATE | DESCRIPTION |
|---|---|---|---|---|
| 2 | | | | AS BUILT |
| 1 | RS | NP | 6/23/25 | CERTIFIED |
| 0 | AD | RS | 4/14/25 | APPROVAL |


Savannah Tank & Equipment Corp.
1517 Telfair Road, Savannah, GA 31415
(912) 233-8902


DRAWN BY: AD
CHK'D BY: RS
APPROVED BY: NP
SCALE: 1/2" = 1'-0"

KIMBERLY CLARK
WET LAP FEED TANK
EQUIP# 520-TK-52001
CUST. PO #C000139275

DRAWING NO.: 019-25-1 SHT 1 OF 5 REV. SET 1

FC-14

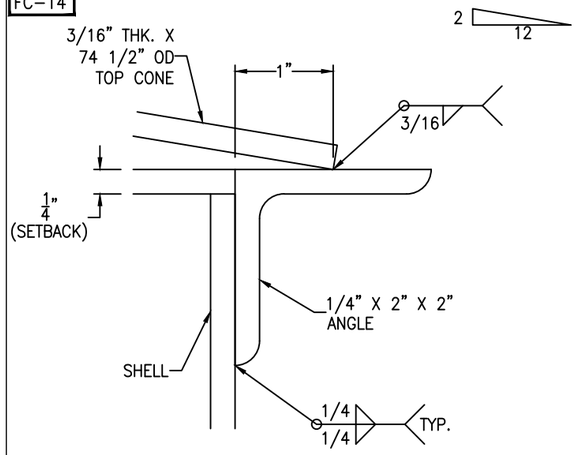


RIM ANGLE DETAIL

SCALE: 1'-0" = 1'-0"

FC-14

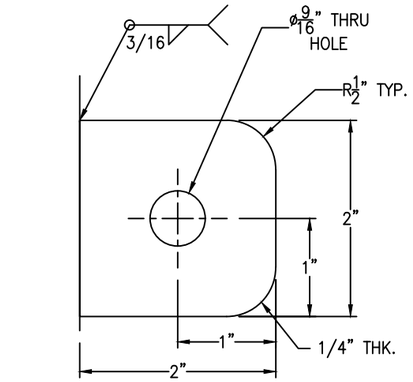


GROUND LUGS ARE LOCATED @ 25° AND 205° △1

GROUND LUG DETAIL

(2 REQ'D) SCALE: 1'-0" = 1'-0"

FC-14

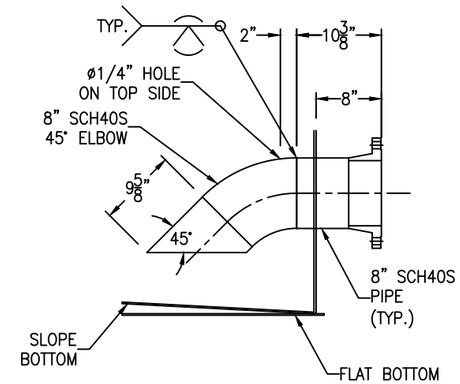


NOZZLE D1 DETAIL

SCALE: 1" = 1'-0"

FC-14

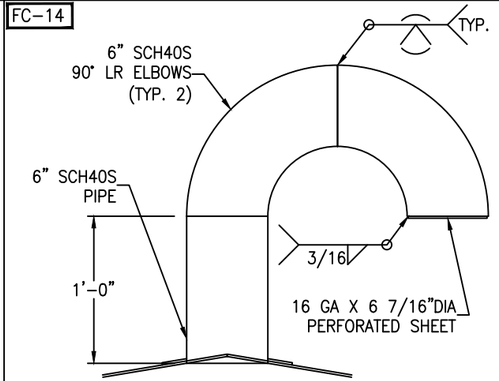


NOZZLE V1 DETAIL

SCALE: 1 1/2" = 1'-0"

FC-14

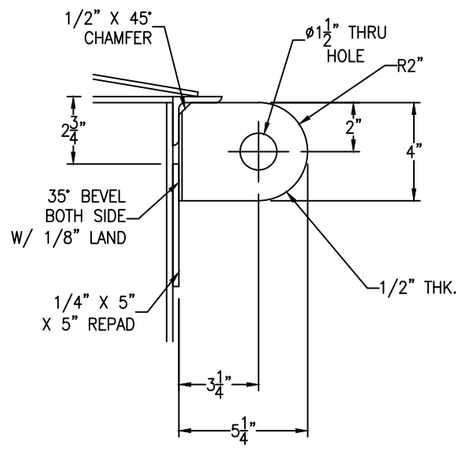


TANK WT. <= 5000#
SHACKLE PIN DIA. = 1 3/8"

LIFT LUG DETAIL

(2 REQ'D) SCALE: 3" = 1'-0"

FC-14

***SHIM PLATE TO BE
SHIPPED LOOSE***

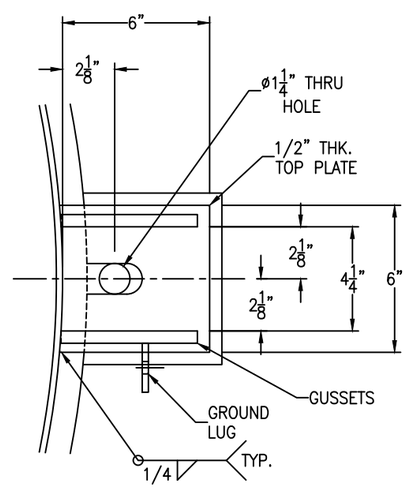


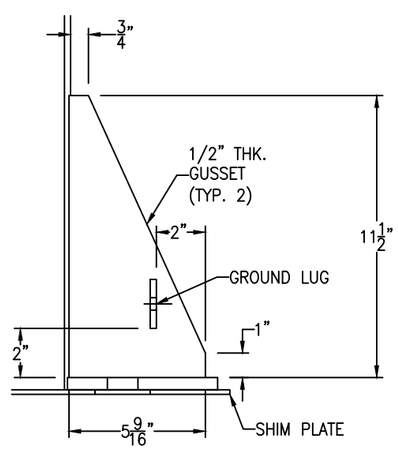


△1 ANCHOR LUG DETAIL

(4 REQ'D) SCALE: 3" = 1'-0"

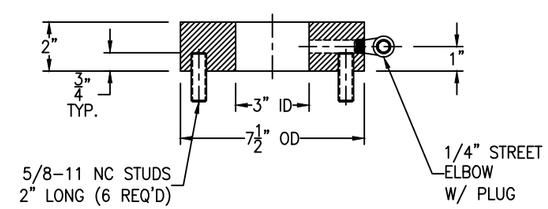


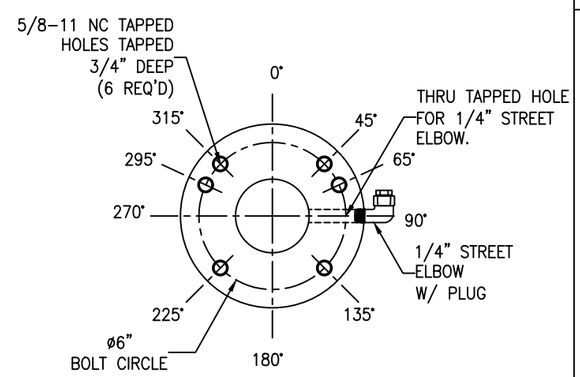


SPECIAL STUDPAD DETAIL

(1 REQ'D) SCALE: 3" = 1'-0"

FC-14

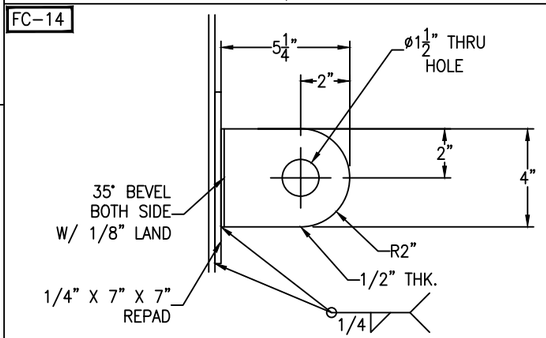


TANK WT. <= 5000#
SHACKLE PIN DIA. = 1 3/8"

TAILING LUG DETAIL

SCALE: 3" = 1'-0"

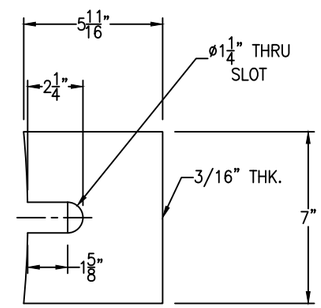


***SHIM PLATE TO BE
SHIPPED LOOSE***

△1 SHIM PLATE DETAIL

SCALE: 3" = 1'-0"

FC-14

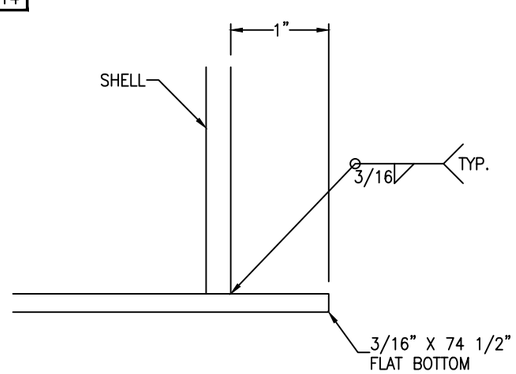


FLAT BOTTOM DETAIL

SCALE: 1'-0" = 1'-0"

| REV | D.BY | C.BY | DATE | DESCRIPTION |
|---|---|---|---|---|
| 2 | | | | AS BUILT |
| 1 | RS | AD | 6/23/25 | CERTIFIED |
| 0 | AD | RS | 4/14/25 | APPROVAL |

△1 REVISIONS


Savannah Tank & Equipment Corp.
1517 Telfair Road, Savannah, GA 31415
(912) 233-8902


DRAWN BY: AD
CHK'D BY: RS
APPROVED BY: NP
SCALE: 1/4" = 1'-0"

KIMBERLY CLARK
WET LAP FEED TANK
EQUIP# 520-TK-52001
CUST. PO #C000139275

DRAWING NO.: 019-25-2 | SHT 2 OF 5 | REV. SET 1

FC-14

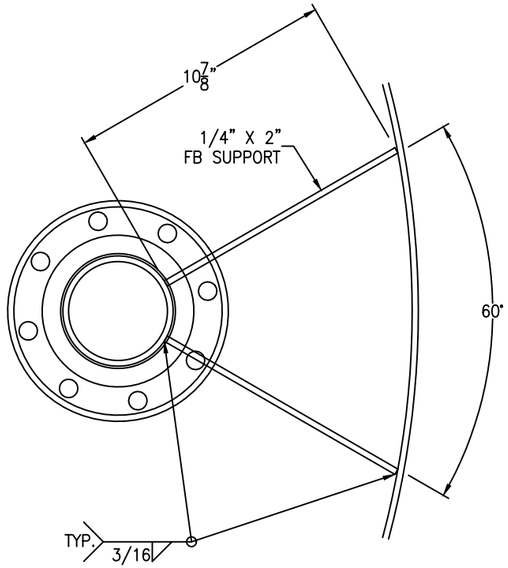


NOZ. B1 SUPT. DETAIL

(2 REQ'D) SCALE: 3" = 1'-0"

FC-14

*NOTCH PIPE.

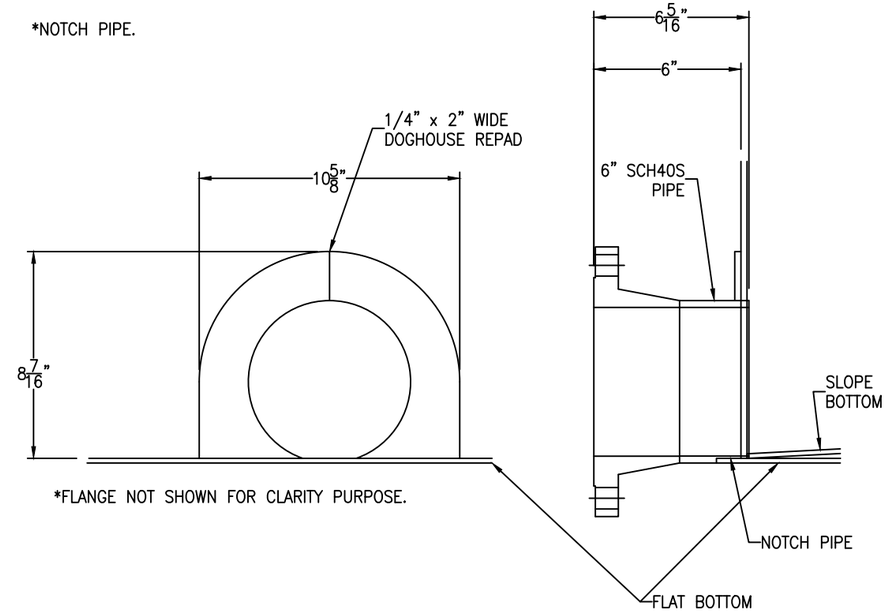


NOZ. D2 REPAD DETAIL

SCALE: 3" = 1'-0"

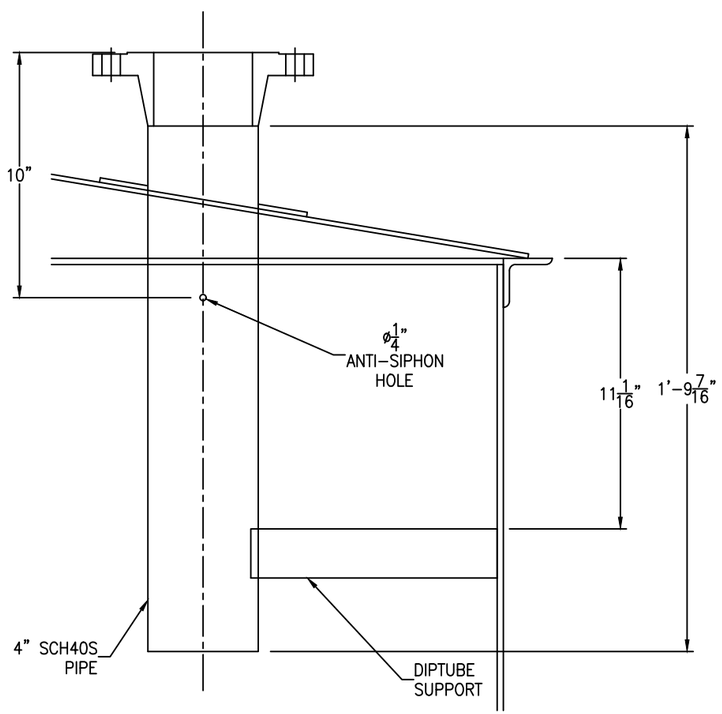


DIPTUBE B1 DETAIL

(2 REQ'D) SCALE: 3" = 1'-0"

| REV | D.BY | C.BY | DATE | DESCRIPTION |
|---|---|---|---|---|
| 2 | | | | AS BUILT |
| 1 | RS | AD | 6/23/25 | CERTIFIED |
| 0 | AD | RS | 4/14/25 | APPROVAL |

REVISIONS


Savannah Tank & Equipment Corp.
1517 Telfair Road, Savannah, GA 31415
(912) 233-8902


DRAWN BY: AD
CHK'D BY: RS
APPROVED BY: NP
SCALE: 1/4" = 1'-0"

KIMBERLY CLARK
WET LAP FEED TANK
EQUIP# 520-TK-52001
CUST. PO #C000139275

DRAWING NO.: 019-25-3 SHT 3 OF 5 REV. SET 1

FC-14

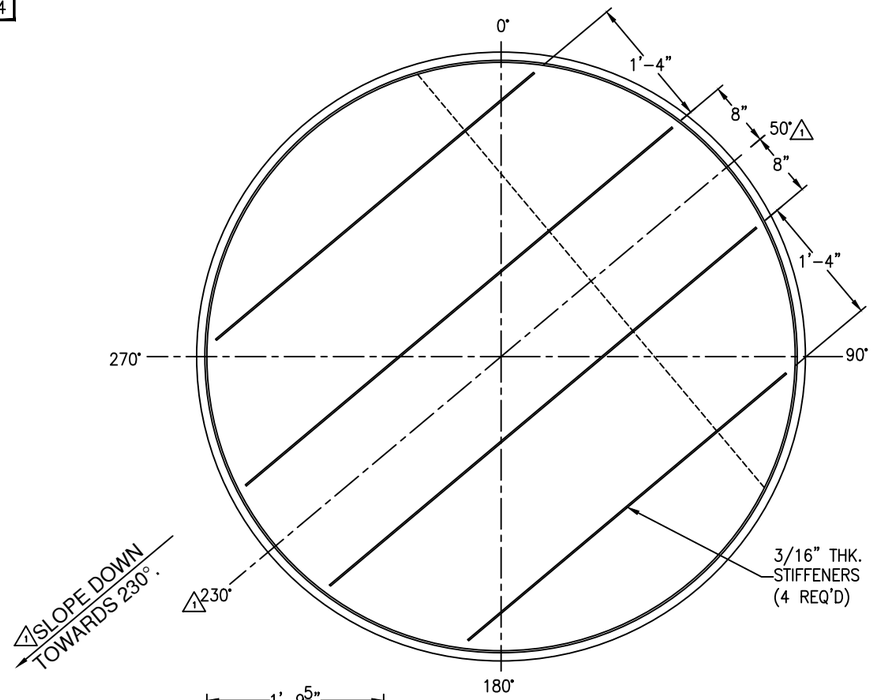


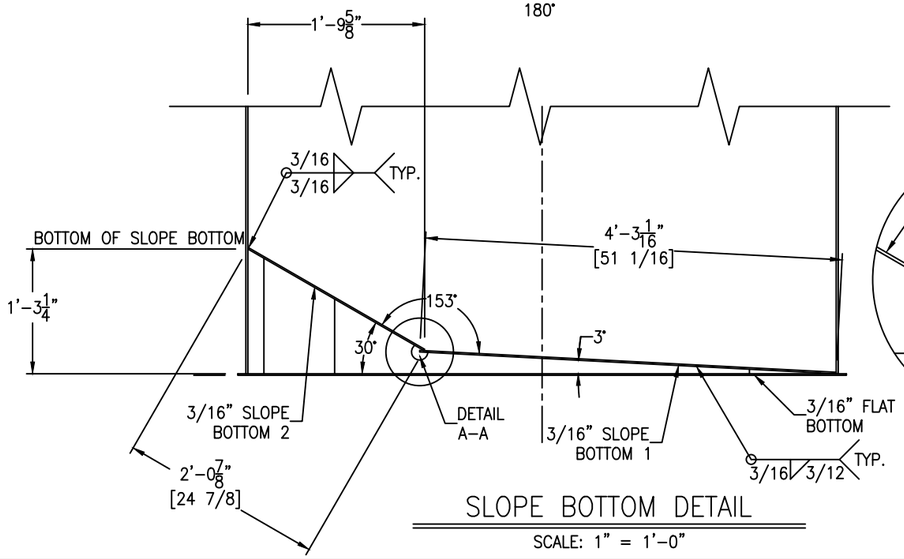


SLOPE BOTTOM DETAIL

SCALE: 1" = 1'-0"

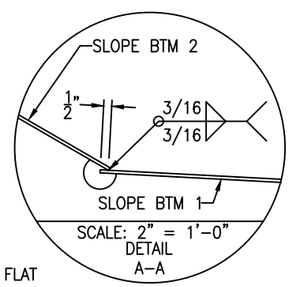


SCALE: 2" = 1'-0"
DETAIL A-A

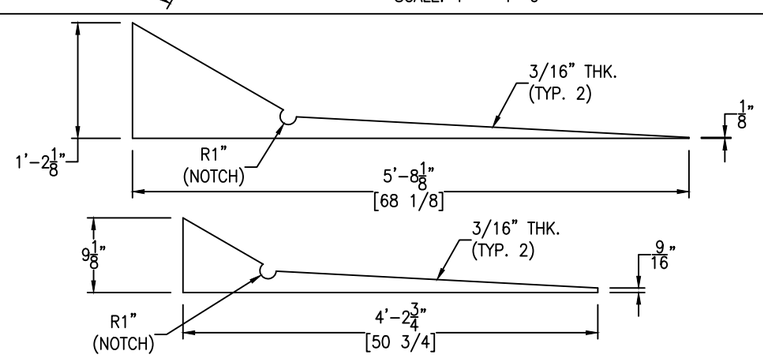


STIFFENERS DETAIL

SCALE: 1" = 1'-0"

FC-14

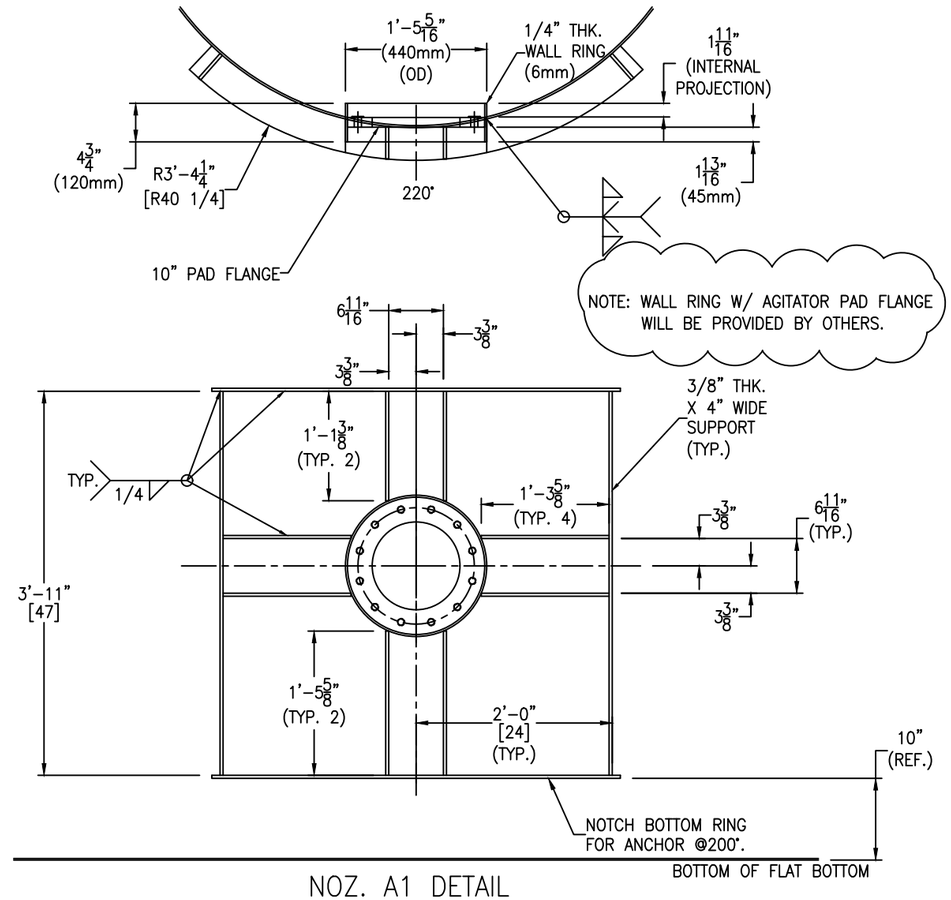


NOZ. A1 DETAIL

SCALE: 1" = 1'-0"

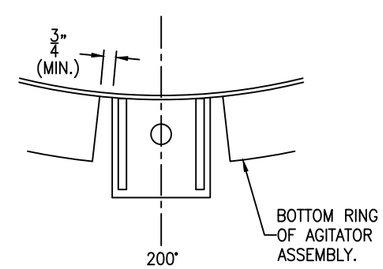


A1 STIFFENER CUTOUT DETAIL

SCALE: 2" = 1'-0"

| REV | D.BY | C.BY | DATE | DESCRIPTION |
|---|---|---|---|---|
| 2 | | | | AS BUILT |
| 1 | RS | AD | 6/23/25 | CERTIFIED |
| 0 | AD | RS | 4/14/25 | APPROVAL |

1 REVISIONS


Savannah Tank & Equipment Corp.
1517 Telfair Road, Savannah, GA 31415
(912) 233-8902


DRAWN BY: AD
CHK'D BY: RS
APPROVED BY: NP
SCALE: 1/4" = 1'-0"

KIMBERLY CLARK
WET LAP FEED TANK
EQUIP# 520-TK-52001
CUST. PO #C000139275

DRAWING NO.: 019-25-4 | SHT 4 OF 5 | REV. SET 1

Bolting for blinds
X1: (12) 7/8-9 NC x 5 1/2" FULL THREADED STUD
(24) 7/8-9 NC HH NUT
(1) 12" 150# RING GASKET X 1/8" THK
(48) BELLEVILLE WASHERS (17-7 STAINLESS STEEL)

Bolting for hinge
(2) 1/2-13 NC x 1 1/2" HH BOLT
(2) 1/2-13 NC HH NUT

FC-14

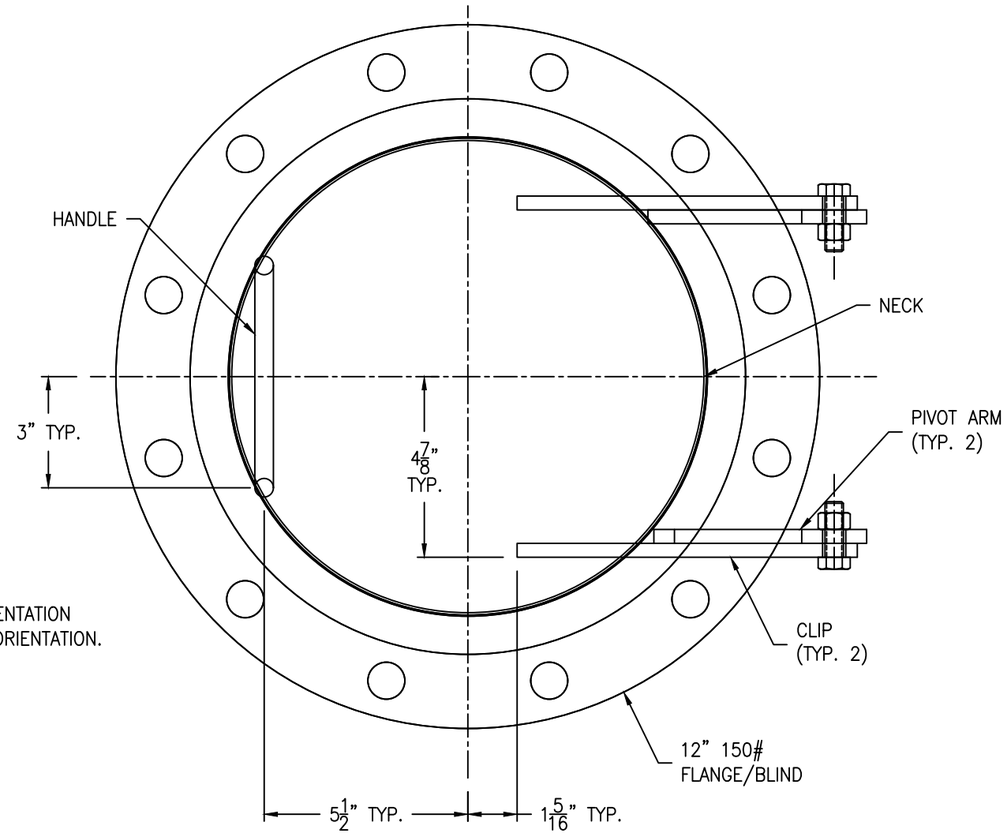


*NOTE: PLEASE CONFIRM THE ORIENTATION FOR HINGE. SEE SHEET #1 FOR ORIENTATION.

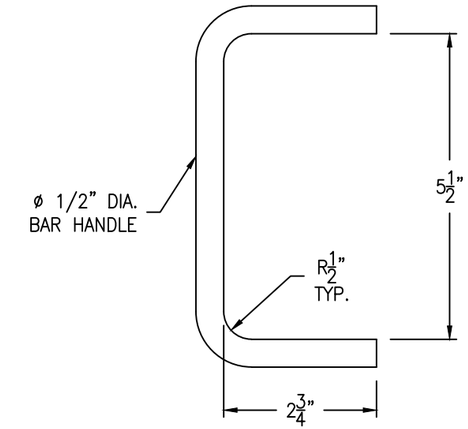


HANDLE DETAIL

(1 REQ'D) SCALE: 6" = 1'-0"

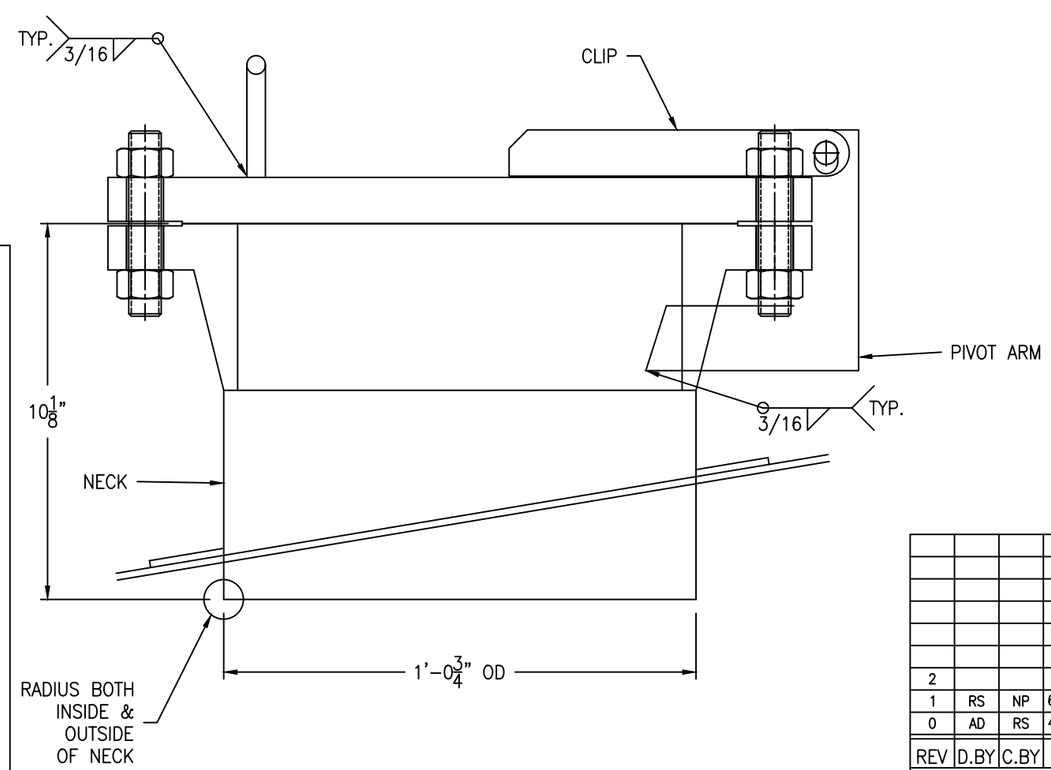


(1 REQ'D) SCALE: 4" = 1'-0"

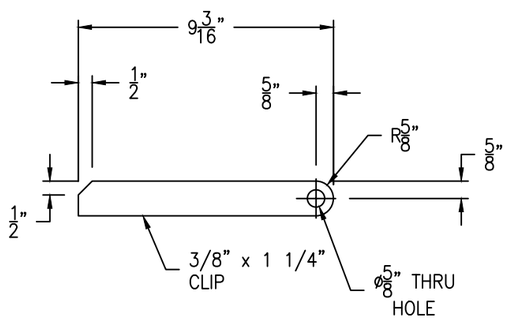


CLIP DETAIL

(2 REQ'D) SCALE: 3" = 1'-0"

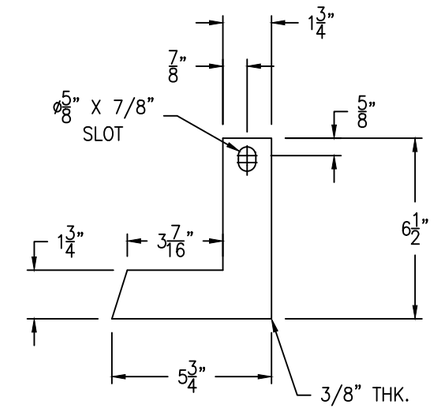


PIVOT ARM DETAIL

(2 REQ'D) SCALE: 3" = 1'-0"

| REV | D.BY | C.BY | DATE | DESCRIPTION |
|---|---|---|---|---|
| 2 | | | | AS BUILT |
| 1 | RS | NP | 6/23/25 | CERTIFIED |
| 0 | AD | RS | 4/14/25 | APPROVAL |

REVISIONS

**Savannah Tank & Equipment Corp.**
1517 Telfair Road, Savannah, GA 31415
(912) 233-8902

DRAWN BY: AD
CHK'D BY: RS
APPROVED BY: NP
SCALE: 2" = 1'-0"

KIMBERLY CLARK
WET LAP FEED TANK
EQUIP# 520-TK-52001
CUST. PO #C000139275

DRAWING NO.: 019-25-5 SHT 5 OF 5 REV. SET 1